US 20070017360A1

(19) **United States**

(12) **Patent Application Publication** (10) **Pub. No.: US 2007/0017360 A1**

Cohen (43) **Pub. Date: Jan. 25, 2007**

(54) **MODULAR ARMORED VEHICLE SYSTEM**

(76) Inventor: **Michael Cohen**, Mobile Post North Yehuda (IL)

Correspondence Address:
FULBRIGHT AND JAWORSKI LLP
555 S. FLOWER STREET, 41ST FLOOR
LOS ANGELES, CA 90071 (US)

(21) Appl. No.: **11/165,854**

(22) Filed: **Jun. 24, 2005**

Related U.S. Application Data

(63) Continuation-in-part of application No. 10/685,377, filed on Oct. 13, 2003.

(30) **Foreign Application Priority Data**

Sep. 22, 2003 (IL) 158,045

Publication Classification

(51) **Int. Cl.**
F41H 7/02 (2006.01)

(52) **U.S. Cl.** **89/36.08**

(57) **ABSTRACT**

The invention provides a modular armored vehicle system comprising an armored combat vehicle chassis having a plurality of areas substantially free of metallic ballistic armor and a plurality of composite armor plates for absorbing and dissipating kinetic energy from high velocity, armor-piercing projectiles, each of the plates being adapted for attachment to the chassis and sized to cover at least one of the plurality of areas, wherein each of the plates comprises a single layer of bodies which are directly bound and retained in plate form by a solidified material wherein a majority of each of the bodies is in direct contact with at least four adjacent bodies, wherein the solidified material and the plate are elastic and wherein the bodies have a specific gravity of at least 2.4 and are made of a ceramic material.

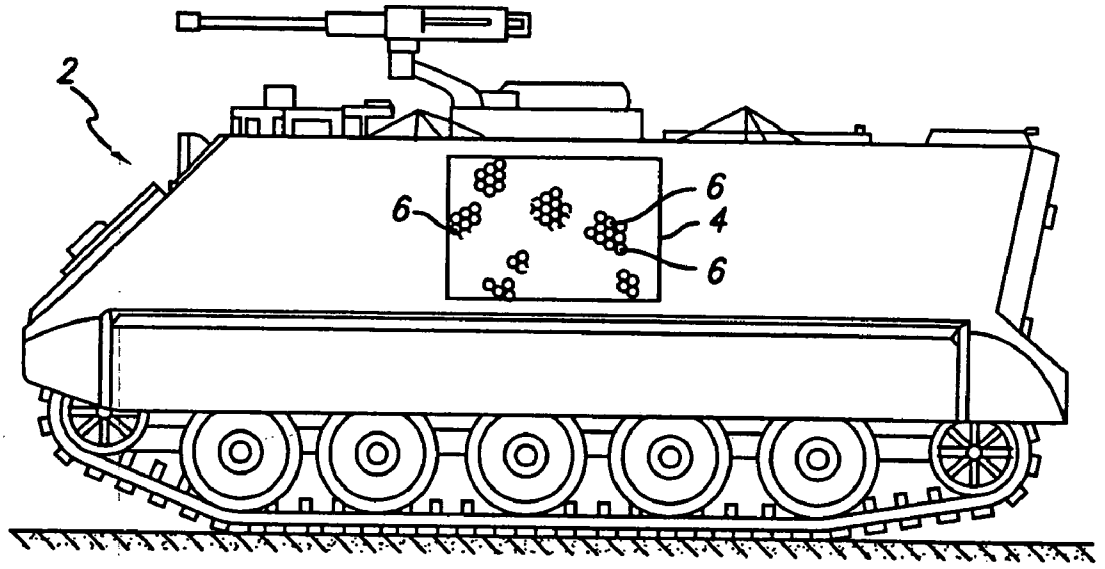

FIG. 1

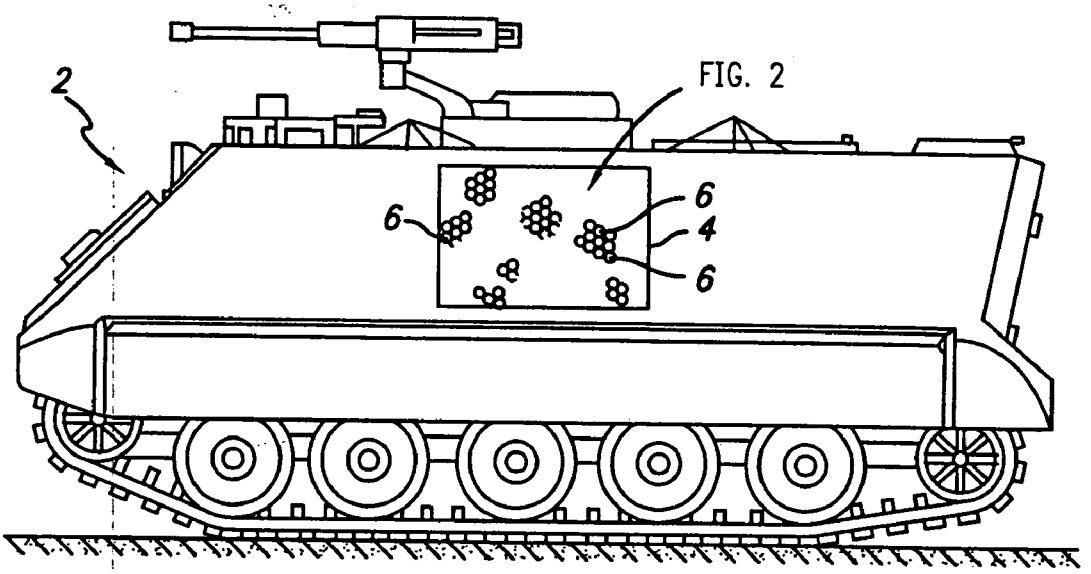

FIG. 2

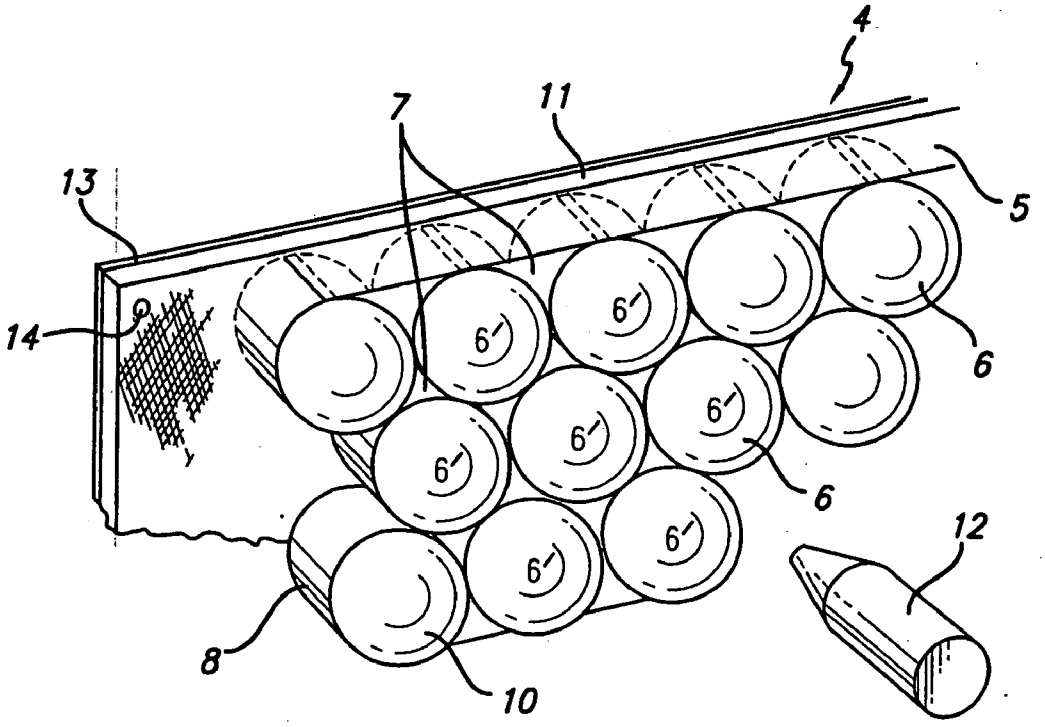

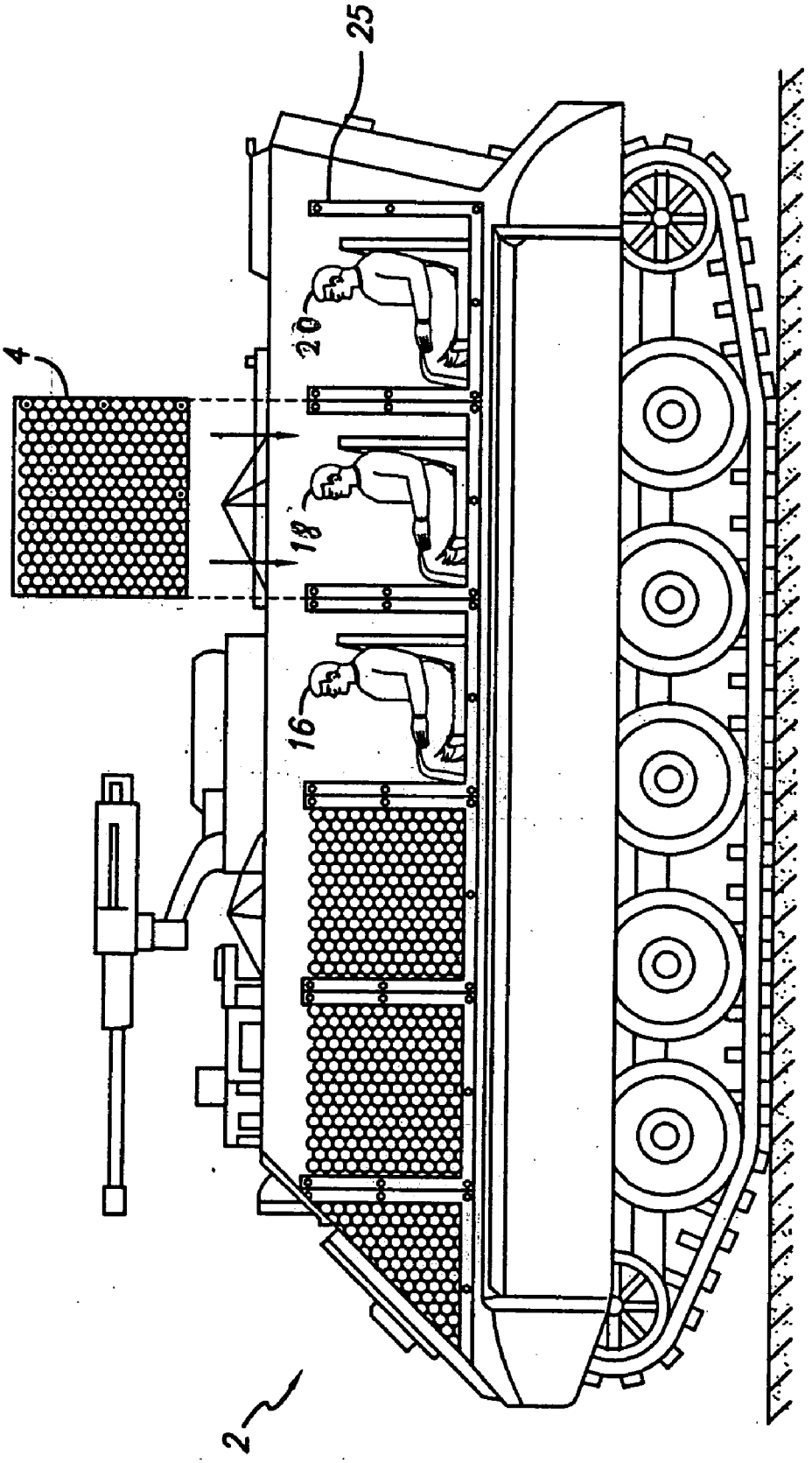

FIG. 3

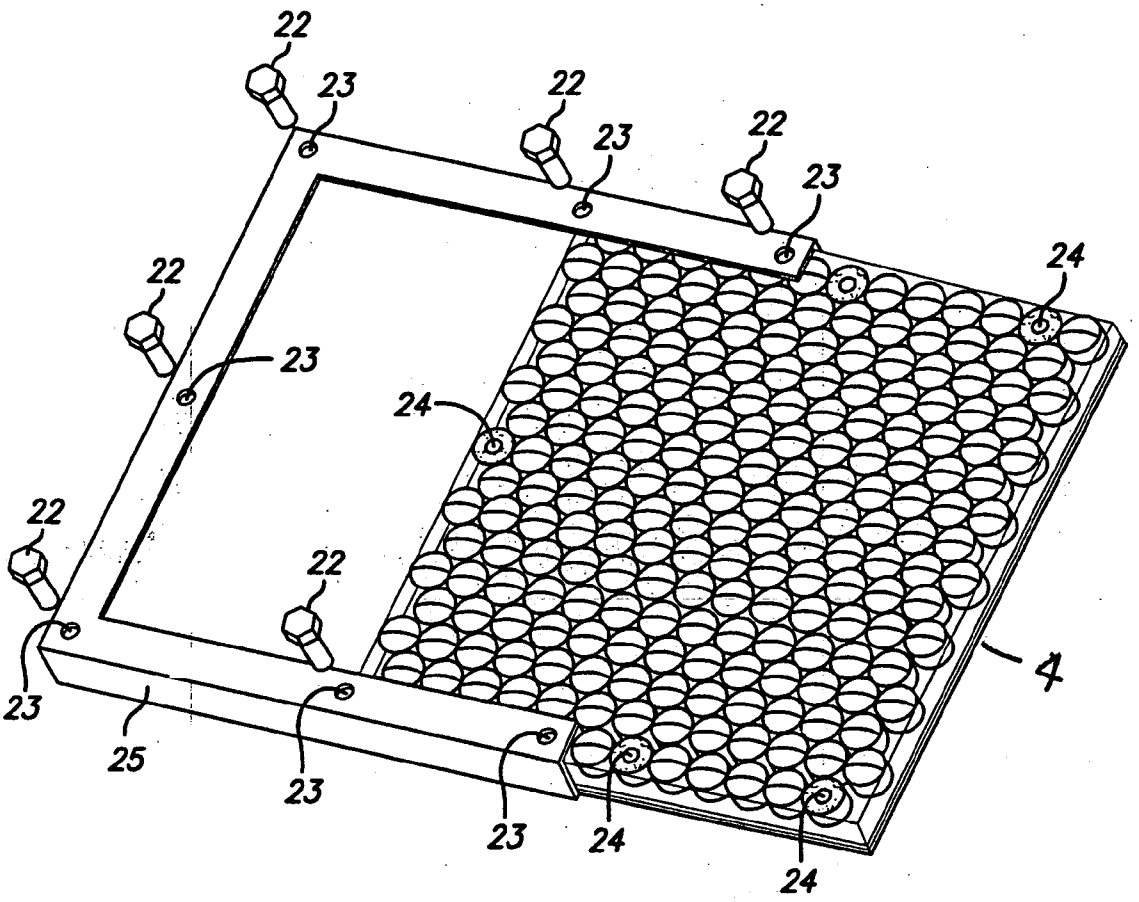

FIG. 4

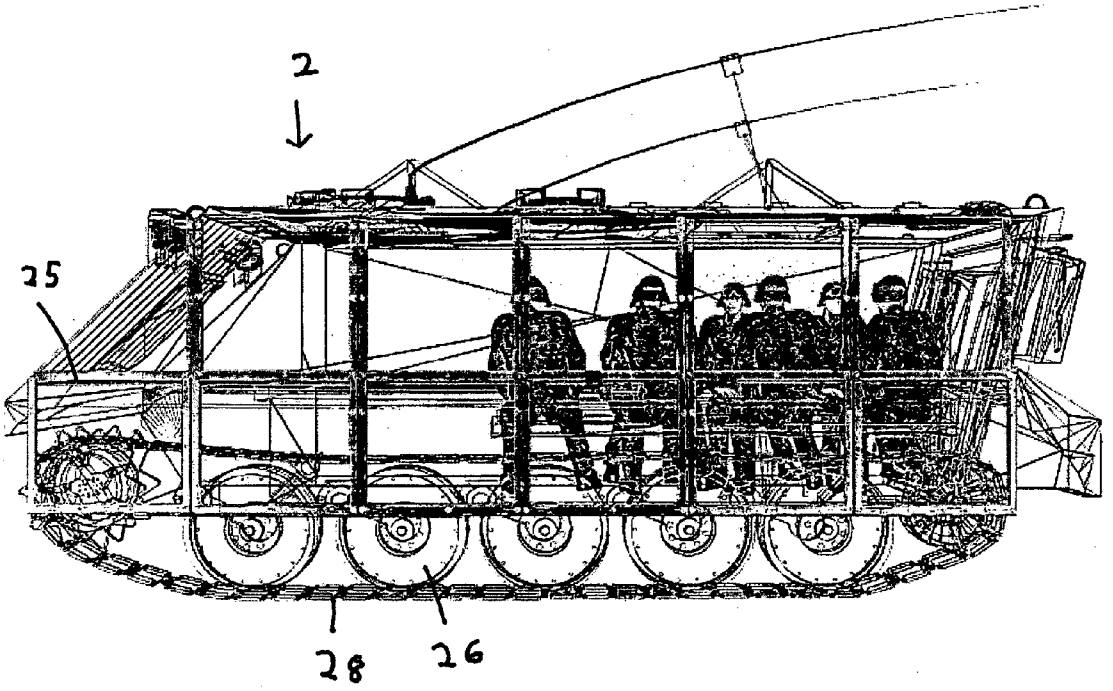

FIG. 5

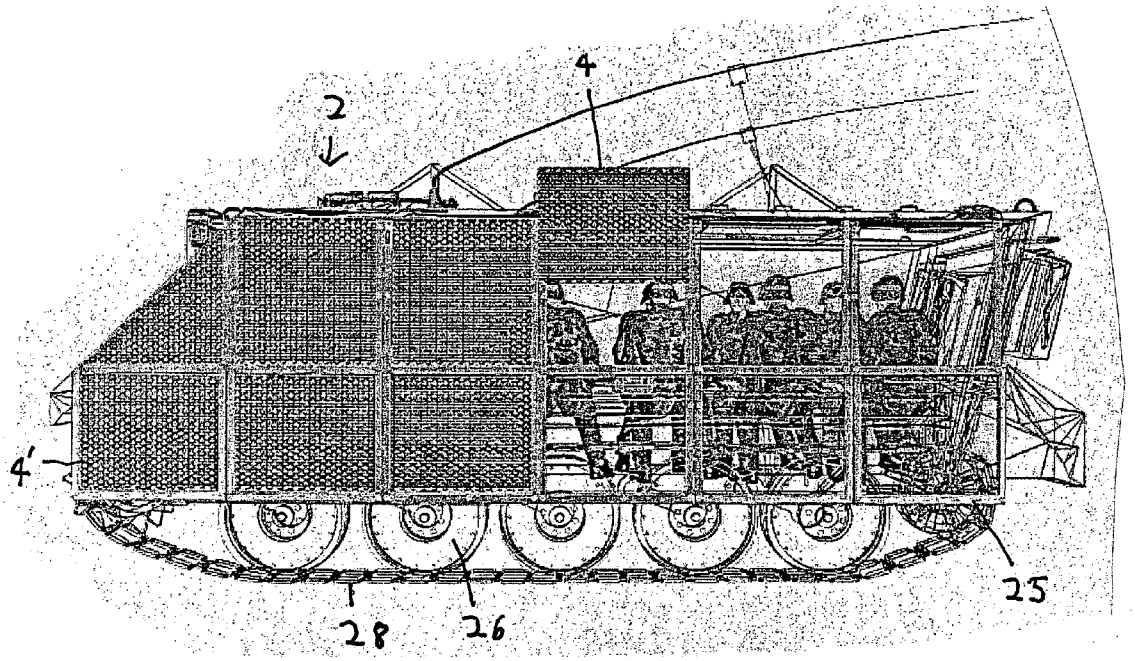

FIG. 6

MODULAR ARMORED VEHICLE SYSTEM

[0001] The present invention relates to a modular armored vehicle system for use in producing armored combat vehicles, More specifically, the present invention relates to a modular armored vehicle system comprising an armored combat vehicle chassis in combination with a plurality of composite armor plates for absorbing and dissipating kinetic energy from high velocity armor-piercing projectiles.

[0002] The present specification is a continuation in part of pending U.S. Ser. No. 10/685377, filed on Oct. 13, 2003, and also entitled A Modular Armored Vehicle System.

[0003] Modular armor mounting systems and the advantages thereof are known in the prior art and are discussed e.g. in U.S. Pat. No. 5,421,238.

[0004] As described therein, the modern battlefield has become a place of ever increasing lethality demanding ever increasing protection. For combat vehicles increasing protection levels implies increasing the amount of armor on the vehicle which increases the vehicle weight. However, the response time available to position a military force and its vehicles from a home base has decreased, and the ability to maintain a large standing military force in foreign lands has diminished. The present protocol is to have vehicles which can be air lifted to a remote location and the vehicles deployed from that location. Air lifting heavy armored vehicles has become increasingly difficult and in the case of the heaviest vehicles is impossible.

[0005] One solution to the present problem is to have a vehicle with a relatively light weight, strong, powerful chassis which can be easily air lifted to the desired location and the needed armor protection attached to the chassis to provide the necessary threat protection. The armor and the vehicle could be transported separately and assembled at a remote site before going into battle.

[0006] Armor applied to a vehicle chassis is described therein as being of two main types; applique armor and modular armor. Applique armor is defined therein as being sheets of armor attached to the vehicle chassis to form an armor skin; while in a modular construction armor, housings containing a threat attenuating filler are attached to the vehicle chassis.

[0007] The present invention to a new concept of modular composite applique armor, i.e. modular elements of composite armor which form the armored skin of the vehicle as described herein.

[0008] Modular armor is designed to take the full force of enemy projectiles leaving the vehicle intact and allowing the crew and vehicle to continue functioning until the vehicle can be brought to a safe area for repair. It is one of the strengths of modular armor that it can be repaired, modified, changed or added to the vehicle as needed.

[0009] As stated, while said patent relates to a modular armor mounting system, it is directed to a mounting structure for attaching standard steel plates to a combat vehicle chassis and thus while said patent relates to providing a lightweight chassis that can be air lifted to a desired location, it does not solve the problem of the weight inherent in steel plated armor sufficient for dealing with the kinetic energy of high velocity armor-piercing projectiles of various calibers.

[0010] Thus, as is known, a steel plate having a weight of 90 kg/m^2 is barely sufficient to stop a threat according to standard NIJ level 4, and it is known that it is necessary to provide a steel plate having a weight of more than 110 kg/m^2 to deal with a projectile of 12.7 mm and when one is dealing with a projectile of 14.5 mm the steel plate capable of stopping the same must weigh about 150 kg/m^2.

[0011] In contradistinction to this prior art approach to armor combat vehicles, it has now been found according to the present invention that it is possible to provide a modular armored vehicle system characterized by lighter weight also when fully armored and in combat use thereby resulting in less motor strain and better motor and vehicle performance.

[0012] Thus, according to the present invention there is now provided a modular armored vehicle system comprising an armored combat vehicle chassis having a plurality of areas substantially free of metallic ballistic armor and a plurality of composite armor plates for absorbing and dissipating kinetic energy from high velocity, armor-piercing projectiles, each of said plates being adapted for attachment to said chassis and sized to cover at least one of said plurality of areas, wherein each of said plates comprises a single layer of bodies which are directly bound and retained in plate form by a solidified material wherein a majority of each of said bodies is in direct contact with at least four adjacent bodies, wherein the solidified material and the plate are elastic and wherein said bodies have a specific gravity of at least 2.4 and are made of a ceramic material,

[0013] In U.S. Pat. No. 6,082,240 there is described and claimed a modular armor mounting system, however, as clearly described in the specification and shown in the drawings thereof, such as with regard to FIGS. **1** and **2**, an armor panel **15**, is mounted on a vehicle hull **16** using rails **20** which are secured by a plurality of rail screws **29** into blind holes provided in said vehicle hull, and therefore since the only holes described in said patent are blind holes for screws, and not large openings which are free of metallic ballistic armor as is the system of the present invention, which basically does not rely on an armored hull for the vehicle, to which further armor is added, said patent does not teach or suggest the present invention.

[0014] As is known, steel and aluminum protection are effective against shrapnel and low energy projectiles. They originally were completely ineffective against threats such as 14.5 mm projectiles and projectiles of greater dimensions unless the material was thickened however this caused an overburdening on the vehicle either inhibiting or eliminating its ability to be used for amphibious and aviational uses. In addition such a vehicle required a larger, stronger engine. Furthermore, the added weight of the steel protection necessitates the reduction of comparable weight through reduction of combatants or combat material.

[0015] Heretofore, ceramic plates were not used as a stand alone armor for armored vehicles because of its susceptibility to fractures and cracks and it was required to pass rigorous, periodical testing. Assuming that a solution based on regular ceramic plates is found, generally this can be based on hot press silicon carbide or metal phase silicon carbide although other ceramic materials can be used and the thickness of the backing has to be at least equal to the thickness of the ceramic plate.

[0016] According to the present invention, as stated above it has now been discovered that composite armor utilizing

ceramic pellets in a solidified material, wherein the solidified material and the plate material are elastic provides for the first time the ability to design a vehicle with ceramic protection due to the high elasticity, high fracture immunity and high durability vis-a-vis vandalism, bending and twisting achievable with the composite panels suggested herein.

[0017] Furthermore, as is known, steel is very ineffective against armor penetrating projectiles. In order to protect against such a threat the steel plates must be very thick and this results in an increase in weight as discussed above.

[0018] On the other hand, ceramic plates, while more effective than steel against armor penetrating projectiles, are breakable and less elastic.

[0019] In contradistinction, the plates used in the present invention characterized by elasticity and high immunity to fracture and cracking creates a new solution enabling the design of a modular vehicle that is much lighter, easily transportable by air overseas, adaptable to amphibious uses and most importantly much lighter on the battle field without effecting battlefield performance.

[0020] The term "elasticity° as used herein relates to the fact that the plates according to the present invention flex to a certain extent when a load or impact is applied thereto however upon release of said load or after impact the plate tends to return to its original shape.

[0021] In preferred embodiments of the present invention, said plate constitutes an outer, impact receiving panel of a multi-layered armor panel further comprising an inner layer adjacent to said outer plate, comprising a second ballistic panel, wherein said outer plate serves to deform and shatter an impacting high velocity armor-piercing projectile and said second ballistic panel is adapted to retain any remaining fragments from said projectile and from said bodies and to absorb remaining energy from said fragments. Said second ballistic panel can be made of any suitable ballistic material including but not limited to aluminium, titanium, Kevlar®, Dyneema®, S2, and combinations thereof.

[0022] In further preferred embodiments of the present invention, said plate constitutes an outer impact receiving panel, a second ballistic panel as defined above as well as comprising a third backing layer for absorbing trauma.

[0023] Preferably, said third layer is formed of a polymeric matrix composite with reinforcing fibers or from metals of high modulus of elongation and tearing strength such as aluminum and titanium.

[0024] It is to be noted that a thin layer of steel plate having a plurality of holes in order to reduce its weight could also be used for said third or even second layer, although the use of the above mentioned metals is preferred.

[0025] In preferred embodiments of the system of the present invention said armored combat vehicle chassis includes a lower area having wheels, tracks, or combinations thereof, and said system further comprises a plurality of composite armor plates adapted for attachment to said chassis and sized to cover at least a portion of said lower area.

[0026] In especially preferred embodiments of the present invention, said composite panel is multi-layered, wherein the first layer is made of a material having a Rockwell hardness of at least 30 RC, the second layer is made of a material having a Rockwell hardness of less than 30 RC, and the third inner layer is made from a backing material which will absorb fragments and particles left from and generated by the impact with said first two layers, such as Kevlar®, Dyneema®, S2, etc.

[0027] The way this embodiment works, and the essence thereof, is that the first hard layer is employed to break the projectile on impact and as such the hardness was defined. For this reason the appropriate materials for this purpose are extremely hard materials such as ceramics or very hard steel or even titanium with hardness above 30 Rockwell-C.

[0028] The purpose of the second layer is to support the outer layer such that during the time of impact the first layer will not be shoved or pierced and in such a way it will be able to cope with the projectile till its final defeat. For this reason the second layer is based on materials of less hard material but is able to give better (added) support to the hard layer. As such the appropriate materials for this are materials such as aluminum, titanium of lower hardness or even hardened Fiber Phenol or 2S. It is even possible to perforate the second layer in order to reduce weight. The purpose of the third layer is to offer backing for remaining fragments that were able to penetrate the previous layers. From this it is evident that the appropriate materials are ballistic materials that are used for backing such as Dyneema, Kevlar, Fiber Phenol, etc. or any combination of these materials that can create a homogenous backing.

[0029] It is to be noted that the first or the second layer can be of a perforated metallic material as described in U.S. Pat. No. 5,014,593, the teachings of which are incorporated herein by reference.

[0030] In especially preferred embodiments said reinforcing fibers are selected from the group consisting of carbon fibers, aramid fibers and glass fibers.

[0031] In especially preferred embodiments of the present invention there is provided a modular armored vehicle system for combat vehicles comprising a plurality of interchangeable plates, a first plurality of said plates having pellets sized to absorb and dissipate kinetic energy from high velocity armor-piercing 12.7 mm-14.5 mm projectiles, a second plurality of said plates having pellets sized to absorb and dissipate kinetic energy from high velocity armor-piercing 14.5 mm-30 mm projectiles, and a third plurality of said plates having pellets sized to absorb and dissipate kinetic energy from high velocity armor-piercing projectiles of over 30 mm, said plates being interchangeably mountable on said combat vehicle chassis for covering the plurality of openings provided in said chassis for said purpose.

[0032] In especially preferred embodiments of the present invention, said bodies are ceramic pellets having at least one axis of at least 9 mm length.

[0033] In the most preferred embodiments of the present invention, the pellets in said plates have a regular geometric cross-sectional area. The term "regular geometric" as used herein refers to forms that are regular forms such as circles and ovals as well as forms that repeat themselves including star shapes, polygonal cross-sectional shapes and multiple repeating patterns of alternating straight and curved segments characterized in that a cut along said regular geomet-

ric cross-sectional area or perpendicular thereto results in two surfaces which are symmetrical.

[0034] In especially preferred embodiments of the present invention, the pellets in said plates have at least one convexly curved outwardly facing end face.

[0035] Especially preferred for use in the present invention are pellets having at least one circular cross section and pellets having substantially cylindrical prismatic bodies with convexly curved end faces are most preferred.

[0036] In the plates of the present invention, the preferred arrangement of the pellets is such that the pellets in said plates each have at least one axis of at least 9 mm length and each of a majority of said pellets is in direct contact with at least six adjacent pellets in the same layer to provide mutual lateral confinement therebetween and said at least one axis is preferably substantially perpendicular to the outer, impact-receiving face of said plate.

[0037] As discussed hereinbefore, today, as the need to airlift mobile combat units together with their armored vehicles has become urgent, the problem of the weight of the armored vehicles has become of paramount importance. The weight of the vehicle, together with the weight of the vehicle's armor protection, creates an over-weight situation which prevents the maximum use of the freight compartment area in the air transport plane, therefore preventing the vehicles from being transported together with all the required equipment needed for combat. The purpose of this invention is to allow the combat vehicle to be transported with all its equipment separately from the vehicle's armor protection, thus allowing for all available space to be utilized to the maximum in accordance with weight restrictions. The armor protection is transported in a second aircraft, and can be easily assembled at the point of destination. In addition this invention allows for the fully functional vehicle to be used without armor protection for peace time operations and for training, thus increasing the lifetime of the vehicles by reducing their weight when armor protection is not essential.

[0038] This invention is possible because of the utilization of ceramic bodies, such as cylinders, regular geometric bodies such as those of hexagonal cross section, domed cylinders, and so on, the amazing properties there of allow for armor panels to be speedily assembled and disassembled on vehicles without any deformation, destruction, or degradation of the panels whatsoever, characteristics which ensure that the uniquely constructed panels can be used and re-used time and time again.

[0039] The vehicle is engineered with frames of the required thickness which provide structural strength and integrity to the vehicle and thereby and as a result of, create hollow or open areas in the structure. These hollows or open areas can be either sealed or left open. The sealing materials will be thin and of light weight materials such as aluminum or any material from the metal family, the fiberglass family, the polycarbonate family, or similar materials, which can seal or close the hollows or open areas so created by the unique structural engineering of the vehicle, thus preventing dust, dirt, and other undesirable elements from penetrating the vehicle, in addition to providing protection to the crew against the elements. Said sealing materials however, will not be made of metallic ballistic armor in order to avoid the weight inherent therein, and to maximize the advantage of the present invention which allows for the attachment of composite, armor, ballistic plates only when needed.

[0040] Another possible cover can be a perforated material which will allow for ventilation while preventing larger, unwanted objects such as rocks, from penetrating the interior of the vehicle.

[0041] The armor panels can be added to the vehicle by means of specially designed bolts or screws, or placed in a channel which is attached to the existing frames of the vehicle, or, for example but not limited to is the possibility that the panel can be placed in the hollow or opening between the frames in such a way that part of the panel will overlap and/or dovetail onto the external portion of the frame creating one unbroken surface, or can be bolted onto the frame itself, or attached in any other way that is suitable to the best performance of the vehicle in compliance with military standards and requirements. In attaching the armor to the vehicle, sealants are used to insure that no chemical or biological hazards can penetrate the interior of the vehicle, in accordance with existing military standards for protection of combat vehicles from such hazards.

[0042] The armored panel can be swiftly fastened to the vehicle via pressure-fasteners, which will place pressure on the sealants thereby preventing penetration from liquids or poison gasses, further allowing for speedy assembly and disassembly.

[0043] The ceramic body which has been pressed, by it's nature, has an external surface area which is not smooth and has a lack of consistency in its diameter along the main axis, and it is because of this that when casting the panel with a solidified material, the casting materials such as resin, molten alumina, epoxy, etc., seeps into all spaces between the ceramic bodies whether they be, e.g., cylinders and spheres, including the very small space found between the walls of two or more adjoining cylinders, forming a natural retaining substance in which the ceramic bodies are confined. Thus, even when apparently closely packed the ceramic bodies never are in a situation in which the casting material will not penetrate between any two bodies. This is because during the pressing process the ceramic material is compacted in the die and when the material is released from the die the material has a tendency to try and spring back to a less compact form. This generally occurs in the top part of the material so pressed, which is the first part of the body released from the die. Thus, in this case, there will be a small difference in the diameter of the body along its vertical axis, Secondly, it is well known that during the pressing process there are sometimes differences in densification of the powder in different areas of the ceramic body. This small difference, when sintered, will cause the body to shrink in accordance with the different compression found in various areas of the body, resulting in a small lack of homogeneity in the diameter along the vertical axis of the body. Thus, there is never a situation in which one ceramic body is perfectly in contact with a second ceramic body in the panel, and the casting material will seep between the two bodies encasing each body, thus creating a partial honeycomb sleeve which wraps the ceramic body.

[0044] When the ceramic panel is based on ceramic tiles, the panel will preferably be protected against vibrations and bending or twisting by energy absorbing materials.

[0045] It should be further noted that the ballistic panels can be used in the following array in conjunction with the

other ballistic layers. Thus a possible arrangement is a first layer of ceramic tiles, an optional layer of backing material, the shock absorbing layer as previously described and then another layer of backing.

[0046] The order of the layers can be changed such that the first layer will be the shock absorbing panel, the second layer an optional thin layer of backing material, the third one a layer of ceramic tiles as well as another layer of backing.

[0047] In all the above options, the layers do not have to be in direct contact with each other and there can in fact be an empty space of air or any neutral material that can take up the space between the existing layers.

[0048] In all the subsequent options it is important to emphasize that the shock absorbing ceramic panel be an integral part of the array of layers and that the ceramic panel preferably includes shapes that incorporate a contact valley.

[0049] It should be further noted that this invention provides for a unique system whereby the crew compartment, wheels, tracks, and such can be protected from projectiles. The present invention in its preferred embodiments provides for a "skirt" which protects the wheels or tracks of the vehicle, this skirt being comprised of any ceramic armor, such as tiles, geometric shapes and so on, which are capable of blunting or shattering and twisting or tumbling the projectiles, which projectiles can then be completely stopped by a thin layer of ceramic materials i.e. having a thickness of between from 4 mm to 20 mm, which can be attached directly to the inner hull or the shell of the vehicle, or even by a thin layer of steel or perforated steel of the type described, e.g. in U.S. Pat. No. 5,014,593. Thus the "skirt" acts as a first impact resistant layer, blunting shattering and twisting or flipping the projectile, and said projectile is then completely arrested by an inner layer of ceramics or lighter steel armor provided for this purpose of shielding the track and wheel area of the vehicle. In most cases the distance between the two layers of armor protection is about 40 centimeters, however this is not critical to the invention.

[0050] The present invention is a modification of the inventions described in US Pat. Nos. 5,763,813; 5,972,819; 6,289,781; 6,112,635; 6,203,908; 6,408,734; and 6,575,075 and in WO-A-9815796 and WO-99/60327 the relevant teachings of which are incorporated herein by reference since while said earlier patents teach composite armor which can be utilized in the present invention none of them teach or suggest the concept of a modular armored vehicle system for use in producing armored combat vehicles wherein the armor panels serve as stand-alone rather than add on protection for an armored vehicle and are adapted for attachment to an armored combat vehicle chassis to cover openings provided therein.

[0051] The panels of the present invention can be attached also by fasteners, including pressure fasteners, as described above and as described in U.S. Pat. No. 6,290,069 and US Design Patent D333254, the relevant teachings of which are incorporated herein by reference.

[0052] Furthermore, in all of the embodiments, a portion of the backing can be a combination of metallic materials bonded together such as titanium bonded to aluminium.

[0053] In U.S. Pat. No. 5,763,813 there is described and claimed a composite armor material for absorbing and dissipating kinetic energy from high velocity, armor-piercing projectiles, comprising a panel consisting essentially of a single internal layer of high density ceramic pellets said pellets having an Al_2O_3 content of at least 93% and a specific gravity of at least 2.5 and retained in panel form by a solidified material which is elastic at a temperature below 250° C.; the majority of said pellets each having a part of a major axis of a length of in the range of about 3-12 mm, and being bound by said solidified material in plurality of superposed rows, wherein a majority of each of said pellets is in contact with at least 4 adjacent pellets, the weight of said panel does not exceed 45 kg/m^2.

[0054] In U.S. Pat. No. 6,112,635 there is described and claimed a composite armor plate for absorbing and dissipating kinetic energy from high velocity, armor-piercing projectiles, said plate consisting essentially of a single internal layer of high density ceramic pellets which are directly bound and retained in plate form by a solidified material such that the pellets are bound in a plurality of adjacent rows, wherein the pellets have an Al_2O_3 content of at least 93% and a specific gravity of at least 2.5, the majority of the pellets each have at least one axis of at least 12 mm length said one axis of substantially all of said pellets being in substantial parallel orientation with each other and substantially perpendicular to an adjacent surface of said plate and wherein a majority of each of said pellets is in direct contact with 6 adjacent pellets, and said solidified material and said plate are elastic.

[0055] In WO-A-9815796 there is described and claimed a ceramic body for deployment in a composite armor panel, said body being substantially cylindrical in shape, with at least one convexly curved end face, wherein the ratio DIR between the diameter D of said cylindrical body and the radius R of curvature of said at least one convexly curved end face is at least 0.64:1.

[0056] In WO 99/60327 it was described that the improved properties of the plates described in the earlier patent applications of this series is as much a function of the configuration of the pellets, which are of regular geometric form with at least one convexly curved end face (for example, the pellets may be spherical or ovoidal, or of regular geometric cross-section, such as hexagonal, with at least one convexly curved end face), said panels and their arrangement as a single internal layer of pellets bound by an elastic solidified material, wherein each of a majority of said pellets is in direct contact with at least four adjacent pellets and said curved end face of each pellet is oriented to substantially face in the direction of an outer impact-receiving major surface of the plate. As a result, said specification teaches that composite armor plates superior to those available in the prior art can be manufactured using pellets made of sintered refractory materials or ceramic materials having a specific gravity below that of aluminum oxide, e.g., boron carbide with a specific gravity of 2.45, silicon carbide with a specific gravity of 3.2 and silicon aluminum oxynitride with a specific gravity of about 3.2.

[0057] Thus, it was described in said publication that sintered oxides, nitrides, carbides and borides of magnesium, zirconium, tungsten, molybdium, titanium and silica can be used and especially preferred for use in said publication and in the present invention are pellets selected from the group consisting of boron carbide, titanium diboride,

silicon carbide, silicon oxide, silicon nitride, magnesium oxide, silicon aluminum oxynitride in both its alpha and beta forms and mixtures thereof.

[0058] In U.S. Pat. No. 6,289,781 there is described and claimed a composite armor plate for absorbing and dissipating kinetic energy from high velocity projectiles, said plate comprising a single internal layer of pellets which are directly bound and retained in plate form by a solidified material such that the pellets are bound in a plurality of adjacent rows, characterized in that the pellets have a specific gravity of at least 2 and are made of a material selected from the group consisting of glass, sintered refractory material, ceramic material which does not contain aluminum oxide and ceramic material having an aluminum oxide content of not more than 80%, the majority of the pellets each have at least one axis of at least 3 mm length and are bound by said solidified material in said single internal layer of adjacent rows such that each of a majority of said pellets is in direct contact with at least six adjacent pellets in the same layer to provide mutual lateral confinement therebetween, said pellets each have a substantially regular geometric form and said solidified material and said plate are elastic.

[0059] In U.S. Pat. No. 6,408,734 there is described and claimed a composite armor plate for absorbing and dissipating kinetic energy from high velocity, armor-piercing projectiles, as well as from soft-nosed projectiles, said plate comprising a single internal layer of high density ceramic pellets, characterized in that said pellets are arranged in a single layer of adjacent rows and columns, wherein a majority of each of said pellets is in direct contact with at least four adjacent pellets and each of said pellets are substantially cylindrical in shape with at least one convexly curved end face, further characterized in that spaces formed between said adjacent cylindrical pellets are filled with a material for preventing the flow of soft metal from impacting projectiles through said spaces, said material being in the form of a triangular insert having concave sides complimentary to the convex curvature of the sides of three adjacent cylindrical pellets, or being integrally formed as part of a special interstices-filling pellet, said pellet being in the form of a six sided star with concave sides complimentary to the convex curvature of the sides of six adjacent cylindrical pellets, said pellets and material being bound and retained in plate form by a solidified material, wherein said solidified material and said plate material are elastic.

[0060] Said solidified material can be any suitable material, such as aluminum, epoxy, a thermoplastic polymer, or a thermoset plastic.

[0061] When aluminum is used as said solidified material an x-ray of the plate shows the formation of a honeycomb structure around the pellets.

[0062] While not shown, the panels of the present invention or at least the outer surface thereof can be furthered covered by a thin layer of Kevlar®, Dyneema®, fiberglass, or even aluminum for protection and for concealing the structure thereof,

[0063] In U.S. Pat. No. 6,497,966 there is described and claimed a composite, laminated armor panel for absorbing and dissipating kinetic energy from projectiles, said panel comprising a first outwardly-positioned layer made of a hard material selected from a ceramic material and a metal having a Rockwell-C hardness of at least 27; an intermediate layer softer than said first layer, made of a material selected from aluminium and metals having a Rockwell-C hardness of less than 27; and a third backing layer of tough woven textile material, wherein said three layers are laminated together and wrapped on at least four sides in a further textile material which is bonded to the outer surfaces of said composite, laminated armor panel.

[0064] As stated, the relevant teachings of all of these specifications are incorporated herein by reference and any of said panels can be used in the present invention.

[0065] Regarding the composite laminated armor panel of U.S. Pat. No. 6,497,966, in the context of the present invention, while said wrapping material is preferred to prevent delamination and to provide improved protection from the second, third and following rounds to impact the panel, it is also possible to use said three layers laminated together and attached to said chassis by insertion in guide rails as discussed with reference to the figures hereinafter, wherein said guide rails prevent delamination. Similarly said three laminated layers can be attached to each other by screws, bolts, or other attachment means known per se.

[0066] Thus it will be understood that the wrapping of the panel is an enhancement which will improve the panel's ability to withstand multi-impact in a superior manner. This is particularly true when the panel is comprised of relative thin layers. However, when the layers are of a more substantial thickness, the delamination of the panel is less; therefore there is a possibility that no wrapping at all will be required in such cases.

[0067] The way this embodiment works, and the essence thereof, is that the first hard layer is employed to break the projectile on impact and as such the hardness was defined. For this reason the appropriate materials for this purpose are extremely hard materials such as ceramics or very hard steel or even titanium with hardness above 30 Rockwell-C.

[0068] The purpose of the second layer is to support the outer layer such that during the time of impact the first layer will not be shoved or pierced and in such a way it will be able to cope with the projectile till its final defeat. For this reason the second layer is based on materials of less hard material but is able to give better (added) support to the hard layer. As such the appropriate materials for this are materials such as aluminum, titanium of lower hardness or even hardened Fiber Phenol or 2S. It is even possible to perforate the second layer in order to reduce weight. The purpose of the third layer is to offer backing for remaining fragments that were able to penetrate the previous layers. From this it is evident that the appropriate materials are ballistic materials that are used for backing such as Dyneema, Kevlar, Fiber Phenol, etc. or any combination of these materials that can create a homogenous backing.

[0069] Since an object of the invention involved creating the lightest possible panel with the best ability to stop ballistic threats, there is a tendency to use thinner layers in order to save weight, hence the wrapping of the panel becomes an important enhancement, however wrapping the panel is only one way of enhancing a panel, and used here only for illustration of the basic idea. For instance, it is also possible to use retaining structures like bolts or frames to

attain the same goal of preventing delamination of the panels during multi impact. Therefore the described system, in this case, is an optimal solution, however not the only possible solution.

[0070] The invention will now be described in connection with certain preferred embodiments with reference to the following illustrative figures so that it may be more fully understood.

[0071] With specific reference now to the figures in detail, it is stressed that the particulars shown are by way of example and for purposes of illustrative discussion of the preferred embodiments of the present invention only and are presented in the cause of providing what is believed to be the most useful and readily understood description of the principles and conceptual aspects of the invention. In this regard, no attempt is made to show structural details of the invention in more detail than is necessary for a fundamental understanding of the invention, the description taken with the drawings making apparent to those skilled in the art how the several forms of the invention may be embodied in practice.

[0072] FIG. **1** is a schematic illustration of an armored vehicle incorporating a panel according to the present invention.

[0073] FIG. **2** is a perspective enlarged view of a small section of an armor panel of the type incorporated in the armored vehicle of FIG. **1**.

[0074] FIG. **3** is a schematic illustration of an armored vehicle having a plurality of openings therein.

[0075] FIG. **4** is a perspective view partially exploded, of an armor plate adapted for attachment to said vehicle to cover said opening.

[0076] FIG. **5** is a schematic elevation of a chassis according to the present invention with troops and before the attachment of panels thereto; and

[0077] FIG. **6** is a schematic elevation of the chassis of FIG. **5** with several panels attached thereto according to the present invention.

[0078] Referring to FIG. **1**, there is seen an armored vehicle **2** wherein a panel **4** of the present invention having a plurality of pellets **6** of substantially cylindrical prismatic bodies **8** with convexly curved end faces **10** as more fully seen with reference to FIG. **2** has been provided in an opening (not shown) of said vehicle **2**.

[0079] Referring to FIG. **2**, there is seen an enlarged segment of one of the panels **4** utilized to cover openings in the vehicle **2** of FIG. **1** wherein said panel comprises a single layer of pellets **6** that are directly bound and retained in plate form by a solidified material **7** wherein a majority of each of said pellets **6** is in direct contact with six adjacent pellets **6'** and each of said pellets are substantially cylindrical prismatic bodies **8** with convexly curved end faces **10** said panel further comprises an inner layer **11** adjacent to said outer facing plate **5** comprising a second ballistic panel wherein said outer plate **5** serves to deform and shatter an impacting high velocity armor-piercing projectile **12** and said second ballistic panel **11** is adapted to retain any remaining fragments from said projectile and from said bodies and to absorb remaining energy from said fragments.

[0080] As will be seen in preferred embodiments of the present invention said panel **4** is further provided with a third backing layer **13** for absorbing trauma and protecting combatants seated in the vehicle from trauma transmitted through the first two layers of the panel.

[0081] Panel **4** is further provided with attachment means **14** for securing said panel to an opening in said vehicle chassis.

[0082] Referring now more particularly to FIG. **3**, there is illustrated a vehicle **2** with a plurality of openings, **16**,**18**, **20** in one side thereof. A composite armor plate **4** is shown positioned to be lowered into place to cover the opening **18** and is adapted to be attached to the side of the vehicle **2** to protect the occupants from incoming projectiles. Similar armor plates would be used to cover the openings **16** and **20** and are shown in position on the forward portion of the vehicle. Obviously similar armor plates would be used in the other surfaces of the vehicle.

[0083] As shown in FIG. **4**, to which reference is hereby made, there is shown in greater detail the armor plate **4**. As is therein shown, the armor plate **4**, which may be constructed as described with respect to FIG. **2**, is adapted to be attached to the vehicle by way of fasteners **22** which are received in openings **23** in the frame **25** to engage openings **24** in the plate **4** to form the attachment means **22**, **23**, **24** to secure the armor plate to the vehicle **2** (not shown). Obviously the frame(s) **25** may be attached to the vehicle **2** prior to inserting the armor plate therein or alternatively the plate and frame may be assembled and together secured in place on the vehicle **2**.

[0084] Referring to FIG. **5**, there is seen a schematic elevation of a vehicle **2** according to a preferred embodiment of the present invention wherein a plurality of frame elements **25** are provided on a substantially hull-less vehicle, which frame elements not only are intended to receive plates **4** to protect soldiers as illustrated with regard to FIG. **3**, but are also provided to receive further plates **4'** to at least partially protect the area of the wheels **26** and the tracks **28** of the vehicle as shown in FIG. **6**.

[0085] In operation the panel **4** of the present invention, when utilizing ceramic bodies having at least one circular cross-section and forming a contact valley therebetween act to stop an incoming projectile in one of the three modes of center contact, flank contact and valley contact as described hereinafter.

[0086] More specifically, it has been found that the novel armor of the present invention traps incoming projectiles between several pellets which are held in a single layer in mutual abutting and laterally-confining relationship.

[0087] An incoming projectile may contact the pellet array in one of three ways:

[0088] 1. Center contact. The impact allows the full volume of the pellet to participate in stopping the projectile, which cannot penetrate without pulverizing the whole pellet, an energy-intensive task which results in the shattering of the pellet. The pellets used are either spheres or other regular geometric shapes having at least one convexly curved end face, said end face being oriented to substantially face in the direction of an outer impact receiving major surface of said plate.

[0089] 2. Flank contact. The impact causes projectile yaw, thus making projectile arrest easier, as a larger frontal area is contacted, and not only the sharp nose of the projectile. The projectile is deflected sideways and needs to form for itself a large aperture to penetrate, thus allowing the armor to absorb the projectile energy.

[0090] 3. Valley contact. The projectile is jammed, usually between the flanks of three pellets, all of which participate in projectile arrest. The high side forces applied to the pellets are resisted by the pellets adjacent thereto as held by the matrix, and penetration is prevented.

[0091] Tables I and 2 are reproductions of test reports relating to multi-layer panels according to the present invention incorporating pellets having substantially cylindrical prismatic bodies with convexly curved end faces wherein said pellets have a diameter of 19 mm and a height of 22 mm and said panel is prepared as described in U.S. Pat. No. 6,112,635.

TABLE 1

TEST PANEL

Description: PROPRIETARY.
Manufacturer: PROPRIETARY
Size: 24.5 × 24.5 in.
Thicknesses: na
Avg. Thick.: na in.
Sample No.: ARRAY-1/TARGET-1
Weight: 78.3 lbs. (a)
Hardness: NA
Plies/Laminates: NA

AMMUNITION

(1): 20 mm Frag. Sim. Lot No.:
(2): 14.5 mm B-32 Lot No.:
(3): Lot No.:
(4): Lot No.:

SET-UP

Vel. Screens: 15.0 ft. & 35.0 ft.
Shot Spacing: PER CUSTOMER REQUEST
Barrel No./Gun: 20–30 MM/14.5–1
Obliquity: 0 deg.
Witness Panel: .020"2024-T3 ALUM.
Range to Target: 40.67 ft.
Range Number: 3
Backing Material: NA
Target to Wit: 6.0 in.
Conditioning: 70 deg. F.

APPLICABLE STANDARDS OR PROCEDURES

(1): PER CUSTOMER REQUEST
(2):
(3):

Shot No.	Amme.	Time s × 10−5	Velocity ft/s	Time s × 10−5	Velocity ft/s	Avg. Vel ft/s	Vel.Loss ft/s	Stk. Vel. ft/s	Penetration	Footnotes
1	1	487.8	4100	488.0	4098	4099	95	4004	None	
2	2	723.5	2764	723.7	2764	2764	7	2757	None	
3	2	715.8	2794	716.1	2793	2794	7	2787	None	
4	2	714.1	2801	714.4	2800	2800	7	2793	None	
5	2	703.9	2841	704.1	2840	2840	7	2833	None	
6	2	633.1	3062	653.2	3062	3062	7	3055	None	
7	2	640.1	3124	640.3	3124	3124	7	3117	None	
8	2	600.8	3329	601.0	3323	3328	7	3321	Bullet/Spall	

[0092]

TABLE 2

TEST PANEL

Description: PROPRIETARY
Manufacturer: PROPRIETARY
Size: 24 × 24 in.
Thicknesses: na
Avg. Thick.: na in.
Sample No.: ARRAY-1/TARGET-2
Weight: 60.9 lbs. (a)
Hardness: NA
Plies/Laminates: NA

AMMUNITION

(1): 14.5 mm B-32 Lot No.:
(2): 20 mm Frag. Sim. Lot No.:
(3): Lot No.:
(4): Lot No.:

TABLE 2-continued

SET-UP

Vel. Screens: 15.0 ft. & 35.0 ft.
Shot Spacing: PER CUSTOMER REQUEST
Barrel No./Gun: 20–30 MM/14.5–1
Obliquity: 0 deg.
Witness Panel: .020"2024-T3 ALUM.
Range to Target: 40.67 ft.
Range Number: 3
Backing Material: NA
Target to Wit: 6.0 in.
Conditioning: 70 deg. F.

APPLICABLE STANDARDS OR PROCEDURES

(1): PER CUSTOMER REQUEST
(2):
(3):

Shot No.	Amme.	Time s × 10−5	Velocity ft/s	Time s × 10−5	Velocity ft/s	Avg. Vel ft/s	Vel.Loss ft/s	Stk. Vel. ft/s	Penetration	Footnotes
1	1	605.3	3304	605.5	3303	3304	7	3297	None	
2	1	589.6	3392	389.8	3391	3392	7	3385	None	
3	2	461.5	4334	461.6	4333	4334	100	4234	None	
4	2	450.8	4437	450.8	4437	4437	102	4335	Bullet/Spall	

[0093] As will be noted, the first panel which had a size of 24.5×24.5 in. and a Dyneema® backing had a weight of only 78.3 lbs. which weight does not include 1.3 lbs. for said soft woven aramid cover and withstood a 20 mm frag. sim projectile and seven out of eight 14.5 mm B-32 projectiles fired at a range of only 40 feet, wherein only the last projectile in which the strike velocity was intentionally raised to a strike velocity of 3,321 ft/s succeeded in penetrating the panel.

[0094] In a test carried out in a second panel of similar dimensions and properties, two out of two 14.5 mm B-32 projectiles did not penetrate the panel and only the second of two 20 mm frag. sim projectiles, which second projectile was fired at an intentionally elevated strike velocity of 4,335 ft/s, succeeded in penetrating the panel.

[0095] In this context it is to be noted that the army sets a standard of requirements for an armor for stopping a designated projectile at a designated assumed strike velocity. In the above tests the armor withstood projectiles fired at the designated standard strike velocity and only projectiles which were fired at a deliberately elevated strike velocity in order to determine the upper limit of impact resistance penetrated the test panels.

[0096] It will be evident to those skilled the art that the invention is not limited to the details of the foregoing illustrative embodiments and that the present invention may be embodied in other specific forms without departing from the spirit or essential attributes thereof. The present embodiments are therefore to be considered in all respects as illustrative and not restrictive, the scope of the invention being indicated by the appended claims rather than by the foregoing description, and all changes which come within the meaning and range of equivalency of the claims are therefore intended to be embraced therein.

What is claimed is:

1. A modular armored vehicle system comprising an armored combat vehicle chassis having a plurality of areas substantially free of metallic ballistic armor and a plurality of composite armor plates for absorbing and dissipating kinetic energy from high velocity, armor-piercing projectiles, each of said plates being adapted for attachment to said chassis and sized to cover at least one of said plurality of areas, wherein each of said plates comprises a single layer of bodies which are directly bound and retained in plate form by a solidified material wherein a majority of each of said bodies is in direct contact with at least four adjacent bodies, wherein the solidified material and the plate are elastic and wherein said bodies have a specific gravity of at least 2.4 and are made of a ceramic material.

2. A modular armored vehicle system according to claim 1 wherein said plate comprises an outer, impact receiving panel of a multilayered armor panel further comprising an inner layer adjacent to said outer plate, comprising a second ballistic panel, wherein said outer plate serves to deform and shatter an impacting high velocity armor-piercing projectile and said second ballistic panel is adapted to retain any remaining fragments from said projectile and from said bodies and to absorb remaining energy from said fragments.

3. A modular armored vehicle system according to claim 1 wherein said bodies are in the form of pellets.

4. A modular armored vehicle system according to claim 1 wherein said composite panel is multi-layered, wherein a first outer layer is made of a material having a Rockwell hardness of at least 30 RC, a second intermediate layer is made of a material having a Rockwell hardness of less than 30 RC, and a third inner layer is made from a backing material which will absorb fragments and particles left from and generated by the impact with said first two layers.

5. A modular armored vehicle system according to claim 1 comprising a plurality of interchangeable plates, a first plurality of said plates having pellets sized to absorb and dissipate kinetic energy from high velocity armor-piercing 12.7 mm-14.5 mm projectiles, a second plurality of said plates having pellets sized to absorb and dissipate kinetic energy from high velocity armor-piercing 14.5 mm-30 mm projectiles, and a third plurality of said plates having pellets sized to absorb and dissipate kinetic energy from high velocity armor-piercing projectiles of over 30 mm.

6. A modular armored vehicle system according to claim I wherein the bodies in said plates have a regular geometric cross-sectional area.

7. A modular armored vehicle system according to claim 1 wherein the bodies in said plates are in the form of pellets having at least one convexly curved outwardly facing end face.

8. A modular armored vehicle system according to claim 1 wherein the bodies in said plates have at least one circular cross-section.

9. A modular armored vehicle system according to claim 1 wherein the bodies in said plates are in the form of pellets, each having at least one axis of at least 9 mm length and each of a majority of said pellets is in direct contact with at least four adjacent pellets in the same layer to provide mutual lateral confinement therebetween and said at least one axis is substantially perpendicular to the outer, impact-receiving face of said plate.

10. A modular armored vehicle system according to claim 2 comprising a third backing layer for absorbing trauma.

11. A modular armored vehicle system according to claim 10 wherein said third layer is formed of a polymeric matrix composite with reinforcing fibers.

12. A modular armored vehicle system according to claim 11 wherein said reinforcing fibers are selected from the group consisting of carbon fibers, aramid fibers and glass fibers.

13. A modular armored vehicle system according to claim 10 wherein said third backing layer is made of a metal material.

14. A modular armored vehicle system comprising an armored combat vehicle chassis having a plurality of areas substantially free of metallic ballistic armor and a plurality of composite armor plates for absorbing and dissipating kinetic energy from high velocity, armor-piercing projectiles, each of said plates being adapted for attachment to said chassis and sized to cover at least one of said plurality of areas wherein each of said plates comprises a single layer of bodies which are directly bound and retained in plate form by a solidified material wherein a majority of each of said bodies is in direct contact with at least four adjacent bodies, wherein the solidified material and the plate are elastic and wherein said bodies have a specific gravity of at least 2.4 and are made of a ceramic material, wherein said plate constitutes an outer, impact receiving panel of a multilayered armor panel further comprising an intermediate layer adjacent to said outer plate, comprising a second ballistic panel, wherein said outer plate serves to deform and shatter an impacting high velocity armor-piercing projectile and said second ballistic panel is adapted to retain any remaining fragments from said projectile and from said bodies and to absorb remaining energy from said fragments and further comprising a third innermost backing layer for absorbing trauma.

15. A modular armored vehicle system according to claim I wherein said armored combat vehicle chassis includes a lower area having wheels, tracks, or combinations thereof, and wherein said system further comprises a plurality of armor plates adapted for attachment to said chassis and sized to cover at least a portion of said lower area.

* * * * *